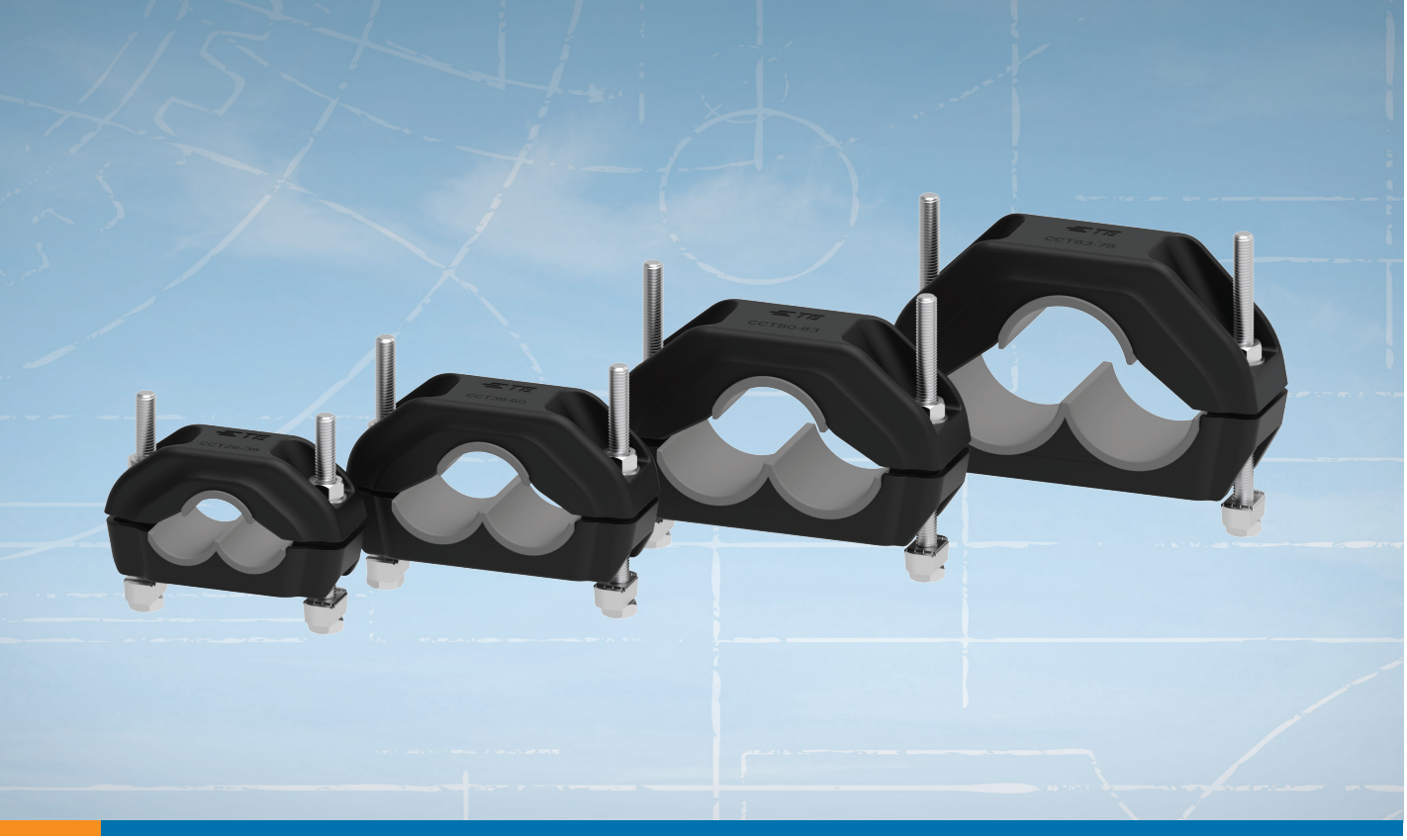

TREFOIL CABLE CLEATS

POLYMERIC FLAME-RETARDANT V0 MATERIAL
STRONG MECHANICAL PERFORMANCE FOR HIGH PROTECTION

KEY FEATURES

- Made from impact-resistant, UV-stabilized, halogen-free, polymeric flame-retardant V0 material for use in harsh environments
- High resistance to electromechanical forces
- Strong mechanical performance due to innovative rib design and glass fiber reinforced material
- Easy and fast installation thanks to simplified design
- Flat surface design allows stacked configuration without an adapter
- Interlocking EPDM molded inserts version for increased asset protection
- Available with stainless-steel hardware for higher corrosion resistance and mechanical performance

TE Connectivity's (TE) Trefoil Cable Cleats are designed to offer a highly reliable retention system for cables and terminations in LV, MV and HV applications. Their compact and stackable design is ideal for installation where space is limited, such as wind farms, data centers and substations.

The trefoil cable cleats are engineered to withstand harsh environments. Made from impact-resistant, UV-stabilized, halogen-free, polymeric flame-retardant V0 material that is UL certified, they perform under extreme temperatures from -40°C to +120°C (-40°F to +248°F).

Tested according to IEC 61914, the cable cleats provide high resistance to electromechanical forces during short circuit conditions, without causing damage to the cables. They also ensure an excellent mechanical performance due to their innovative rib design and glass fiber reinforced material.

An easy and fast installation is achieved thanks to their simplified design without any need for reinforcing accessories. The flat surface of the cable cleat allows different stacked configurations without special hardware or height adapters. Our trefoil cable cleats are range-taking to fit cables with an outer diameter up to 75 mm (2.95 inches), and are suitable for both metric and imperial sized hardware.

The interlocking EPDM molded inserts accommodate cable expansion, contraction, and vibration, as well as offer an increased level of asset protection and reduce mechanical load in vertical applications.
The SS304 stainless-steel hardware offers higher corrosion resistance and mechanical performance. To serve a wider application range, our cable cleats are also available as single and dual versions.

Customers can count on consistent, high quality products, driven by TE's proven innovation and backed by our extraordinary customer support.

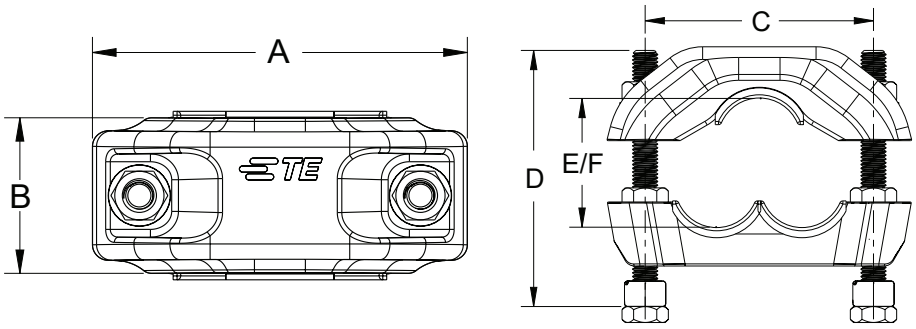

PRODUCT SELECTION INFORMATION - DIMENSIONS IN MM AND (INCHES)

Description	Available Mounting Option	Length A	Depth B	Bolt Hole Center C	Max Installed Height D	Min Cable E	Max Cable F
CCT26-38	Cable Cleat Only	143 (5.63)	60 (2.36)	107 (4.21)	-	27 (1.06)	42 (1.65)
CCT26-38-INS	Cable Cleat with Inserts	143 (5.63)	60 (2.36)	107 (4.21)	120 (4.72)	26 (1.02)	38 (1.50)
CCT26-38-SN	Strut Nut						
CCT26-38-FM	Flat Mount						
CCT26-38-CM	Center Mount						
CCT38-50	Cable Cleat Only	173 (6.81)	60 (2.36)	139 (5.47)	-	39 (1.53)	54 (2.12)
CCT38-50-INS	Cable Cleat with Inserts	173 (6.81)	60 (2.36)	139 (5.47)	140 (5.51)	38 (1.5)	50 (1.97)
CCT38-50-SN	Strut Nut						
CCT38-50-FM	Flat Mount						
CCT38-50-CM	Center Mount						
CCT50-63	Cable Cleat Only	199 (7.83)	65 (2.56)	163 (6.42)	-	54 (2.12)	67 (2.63)
CCT50-63-INS	Cable Cleat with Inserts	199 (7.83)	65 (2.56)	163 (6.42)	150 (5.90)	50 (1.97)	63 (2.48)
CCT50-63-SN	Strut Nut						
CCT50-63-FM	Flat Mount						
CCT50-63-CM	Center Mount						
CCT63-75	Cable Cleat Only	223 (8.78)	65 (2.56)	187 (7.36)	-	67 (2.63)	79 (3.11)
CCT63-75-INS	Cable Cleat with Inserts	223 (8.78)	65 (2.56)	187 (7.36)	170 (6.69)	63 (2.48)	75 (2.95)
CCT63-75-SN	Strut Nut						
CCT63-75-FM	Flat Mount						
CCT63-75-CM	Center Mount						

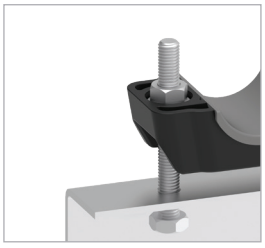

FLAT MOUNT VERSION

For installation on a mounting plate.

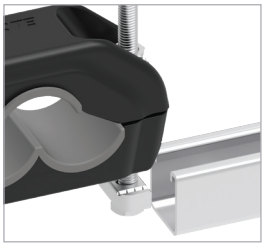

STRUT NUT VERSION

For installation on a mounting rail.

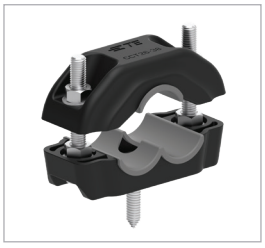

CENTER MOUNT VERSION

For installation through the center.

Learn more: TE.com/energy

© 2021 TE Connectivity. All Rights Reserved. EPP-3748-DDS-4/21-TREFOILCLEATS-TE

TE, TE Connectivity, TE connectivity (logo), EVERY CONNECTION COUNTS are trademarks owned or licensed by TE Connectivity. Other logos, product and company names mentioned herein may be trademarks of their respective owners. While TE has made every reasonable effort to ensure the accuracy of the information in this brochure, TE does not guarantee that it is error-free, nor does TE make any other representation, warranty or guarantee that the information is accurate, correct, reliable or current. TE reserves the right to make any adjustments to the information contained herein at any time without notice. TE Connectivity's obligations shall only be as set forth in TE Connectivity's Standard Terms and Conditions of Sale for this product and in no case will TE Connectivity be liable for any incidental, indirect or consequential damages arising out of the sale, resale, use or misuse of the product. TE expressly disclaims all implied warranties regarding the information contained herein, including, but not limited to, any implied warranties of merchantability or fitness for a particular purpose. The dimensions, specifications, and/or information contained herein are for reference purposes only and are subject to change without notice. Consult TE for the latest dimensions, specifications, and/or information. Users of TE Connectivity products should make their own evaluation to determine the suitability of each such product for the specific application.

Connect with us:

TE.com/energy-contact